


# GYL8
# RCCB

Overload, short circuit, leakage protection; Suitable for industrial, commercial, high-rise and civil residential and other occasions.

## Product Feature

- Standard：IEC/EN60898-1、GB10963.1
- Double sink flow bar wiring function
- Maximum Wiring Capacity 25mm²

## Product Model And Implication

| GYL8 | M | 2P | 63A | 30mA | AC | □ | □ |
|---|---|---|---|---|---|---|---|
| Product model | Protection type | Pole | Rated current(A) | Rated residual action current | Residual current action type | Performance characteristic | Special applications |
| RCCB | M (electrom-agnetic type)<br>E (electrom-agnetic type) | 2P<br>4P | 16<br>25<br>40<br>63 | 30<br>100<br>300 | AC Type: Sine AC Distribution System(default)<br>A Type: Sine AC or pulsating DC ground fault system | None Identifier: instant(t<100mS)<br>S: Delay type (t:130-500mS) | None Identifier: None<br>SI:Transient interference suppression type (actuation time: 40-150mS) |

## Technical Specification

| | | | |
|---|---|---|---|
| Residual current action type | | | AC、A |
| Rated Current | In | A | 16、25、40、63 |
| Poles | | | 2P、4P |
| Rated Operational Voltage | Un | V | 240/415V |
| Nominal Insulation Voltage | Ui | V | 500 |
| Working Frequency | | Hz | 50/60 |
| Rated residual action current | I△n | mA | 30、100、300 |
| Rated impact tolerance voltage | Uimp | V | 4000 |
| 1 min dielectric voltage | | V | 2000 |
| Rated limit short circuit current | Inc | kA | 4.5、6 |
| Rated limit Remaining short circuit current | I△c | kA | 4.5、6 |
| Rated on and off capacity | Im | A | 500A(25A,40A),or 10In(≥63A) |
| Rated residual switching and breaking capacity | I△m | A | 500A(25A,40A),or 10In(≥63A) |





## Residual leakage current breaking time

| Rated current In(A) | Rated residual action current I△n(mA) | Residual current breaking time (s) | | |
|---|---|---|---|---|
| | | I△n | 2I△n | 5I△n |
| 16、25、40、63 | 30、100、300 | 0.1 | 0.08 | 0.04 |

## Outline Overall And Installing Dimensions

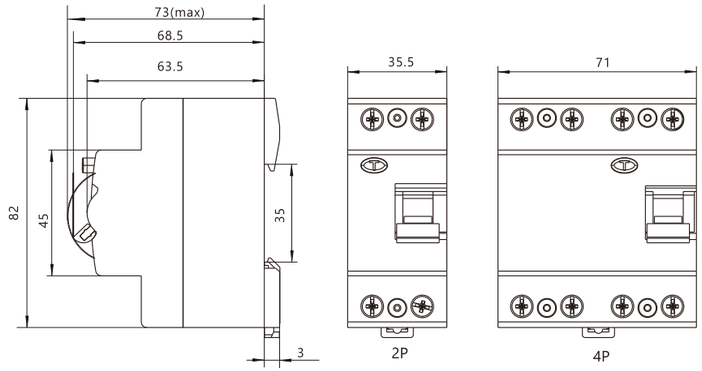


GYL8 RCCB
GYL10 RCCB
GYL9 RCCB
GYL9-A+EV RCCB
GYL9-B RCCB
GYR9N RCBO
GYR9NE-ARC AFDD
GYR9NE-B RCCB
GYR10N RCBO
GYD9-W WIFI MCB
GYRC WIFI CB
GRD9L Recloser